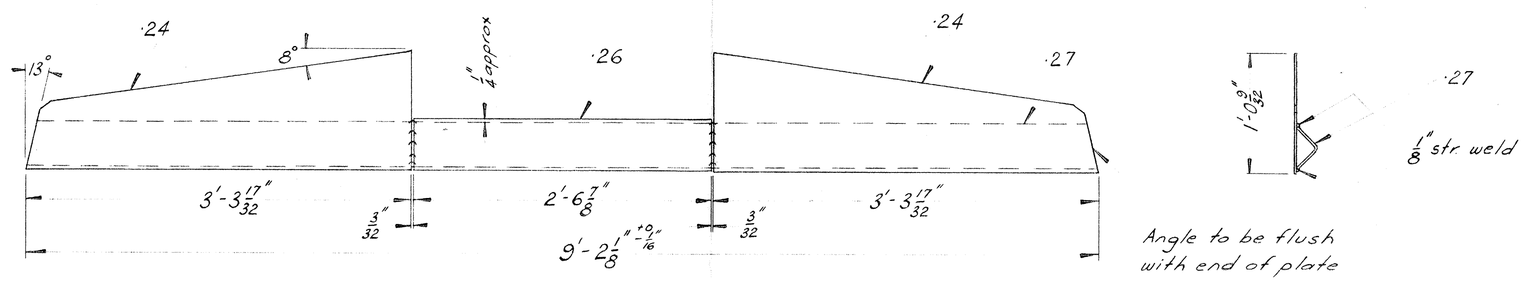

Angle to be flush with end of plate

CROSS TIE ASSEMBLY
8 Thus

GJF 11·29

B	AS-A186 Gde 350 ex AS-A151 Gde B	19-6-72	I.F.S.
Letter	Amendment	Date	Initial

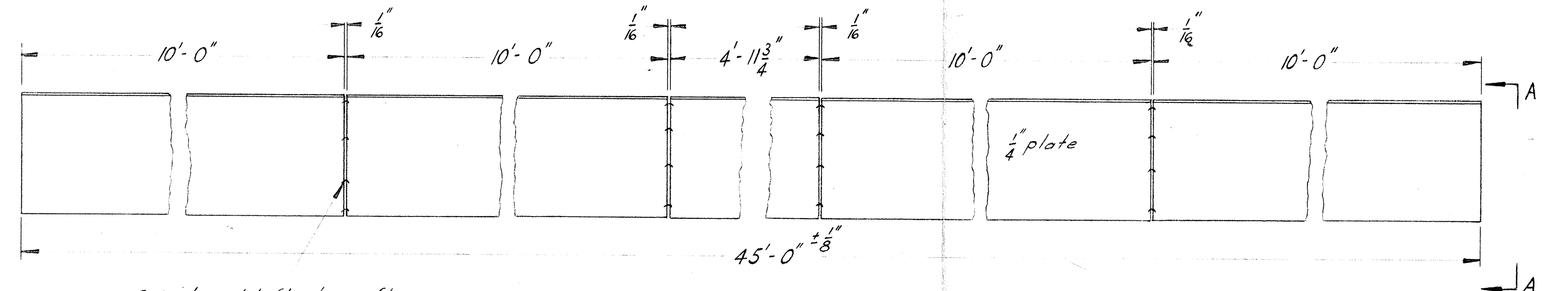

Grind weld flush on flanges fitting to side sheet

TOP SILL
2 Thus
[B] Steel AS-A186 Grade 350

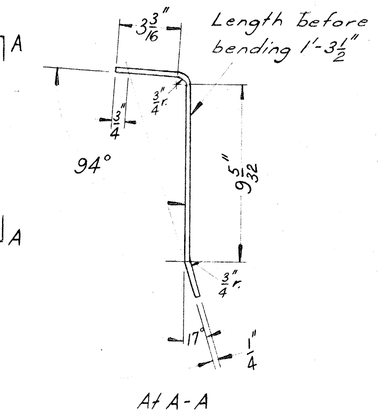

At A-A

GJF 11·30

B	AS-A186 Gde 350 ex AS-A151 Gde B	19-6-72	I.F.S.
Letter	Amendment	Date	Initial

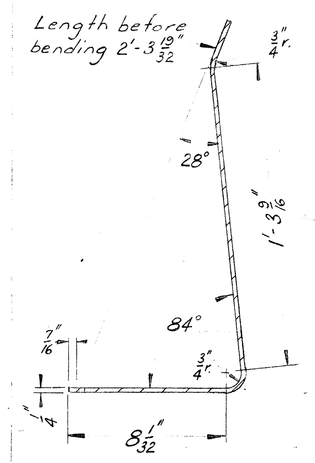

At B-B

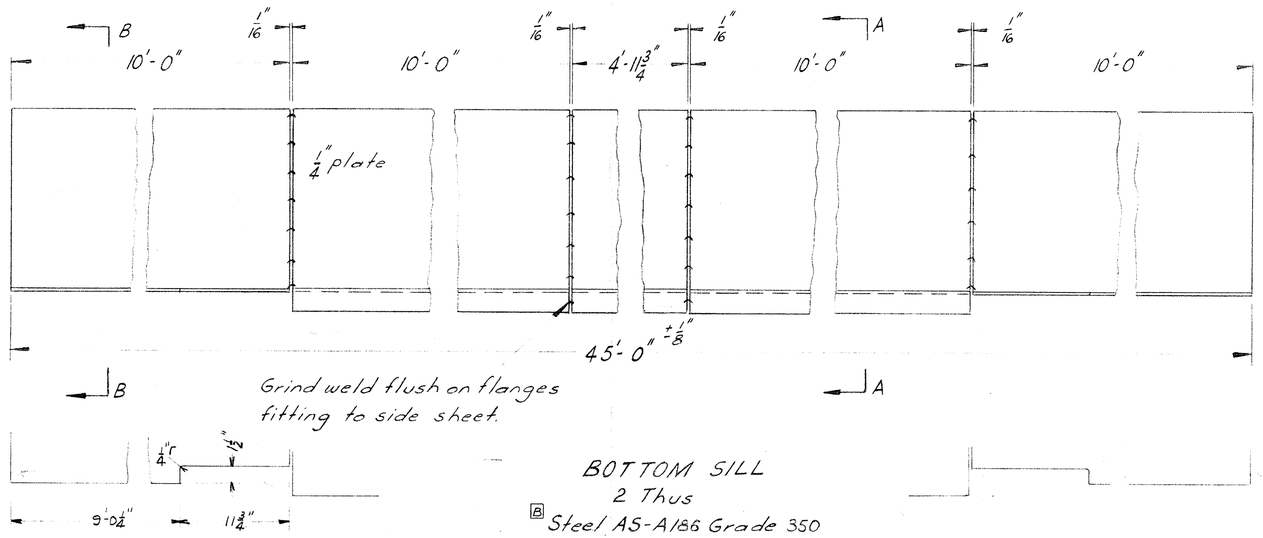

Grind weld flush on flanges fitting to side sheet.

BOTTOM SILL
2 Thus
[B] Steel AS-A186 Grade 350

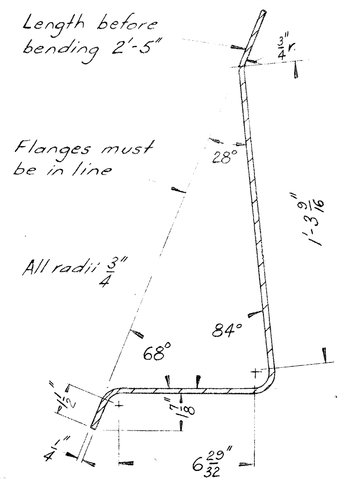

At A-A

GJF 11·31

B	AS-A186 Gde 350 ex AS-A151 Gde B	19-6-72	I.F.S.
Letter	Amendment	Date	Initial

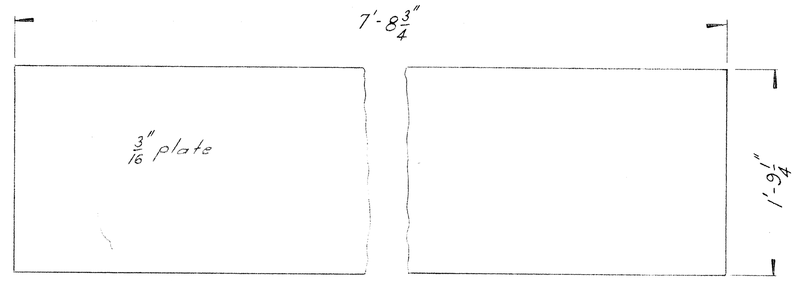

CROSS TIE
3 Thus
[B] Steel AS-A186 Grade 350

GJF 11·32

B	AS-A186 Gde 350 ex AS-A151 Gde B	19-6-72	I.F.S.
Letter	Amendment	Date	Initial

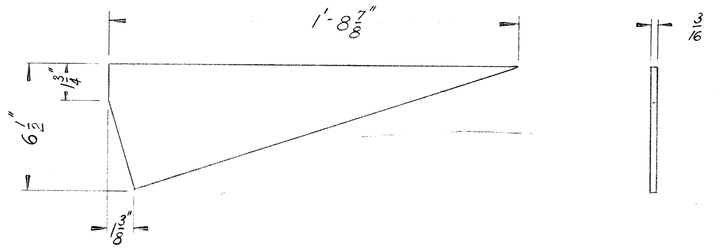

GUSSET
Shear Plate to Hopper
4 Thus
[B] Steel AS-A186 Grade 350

GJF 11·33

B	AS-A186 Gde 350 ex AS-A151 Gde B	19-6-72	I.F.S.
Letter	Amendment	Date	Initial

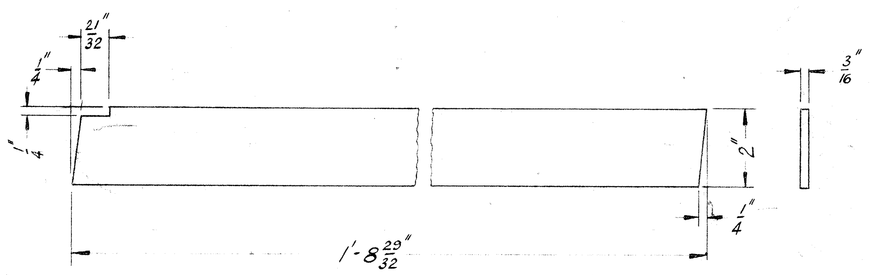

GUSSET FLANGE
Shear Plate to Hopper
4 Thus
[B] Steel AS-A186 Grade 350

GJF 11·34

B	AS-A186 Gde 350 ex AS-A151 Gde B	19-6-72	I.F.S.
Letter	Amendment	Date	Initial

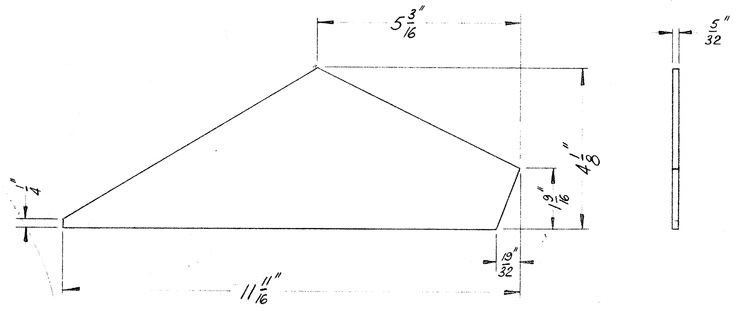

GUSSET
Baffle Channel
4 Thus
[B] Steel AS-A186 Grade 350

GJF 11·35

B	AS-A186 Gde 350 ex AS-A151 Gde B	19-6-72	I.F.S.
Letter	Amendment	Date	Initial

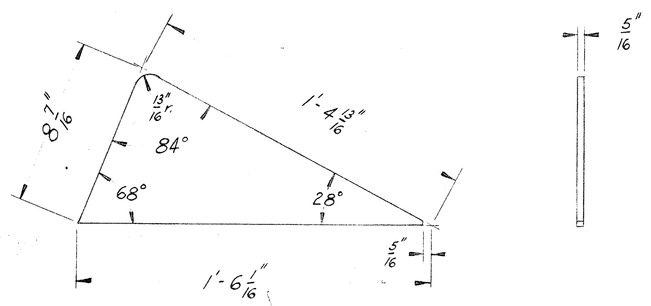

END PLATE
Bottom Sill
4 Thus
[B] Steel AS-A186 Grade 350

GJF 11·36

B	AS-A186 Gde 350 ex AS-A151 Gde B	19-6-72	I.F.S.
Letter	Amendment	Date	Initial

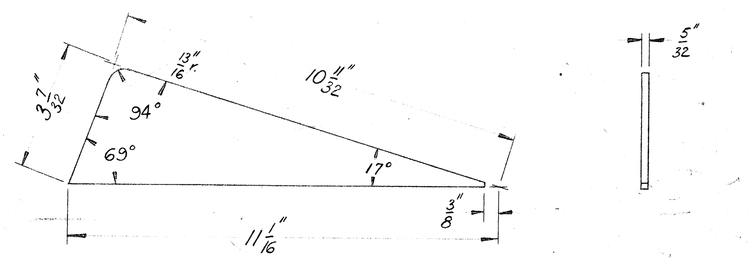

END PLATE
Top Sill
4 Thus
[B] Steel AS-A186 Grade 350

GJF 11·37

B	AS-A186 Gde 350 ex AS-A151 Gde B	19-6-72	I.F.S.
Letter	Amendment	Date	Initial

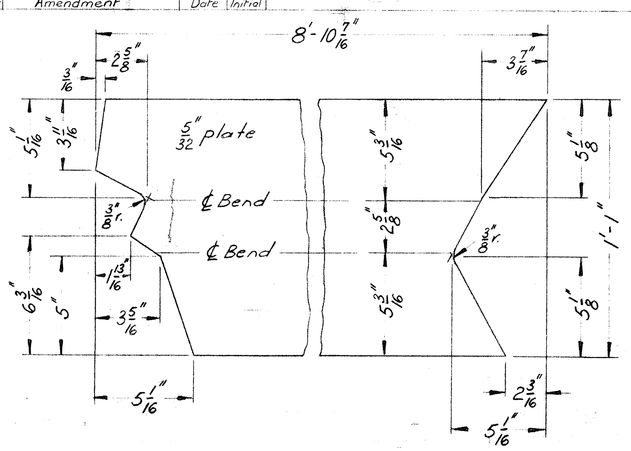

Shape Before Bending

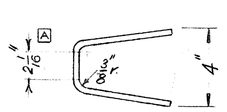

VERTICAL STIFFENER
End Plate
·38 - 2 Thus
·39 - 2 Opp. hand
[B] Steel AS-A186 Grade 350

B	AS-A186 Gde 350 ex AS-A151 Gde B	19-6-72	I.F.S.
A	2 1/8" dim. added	29-11-71	J.R.W.
Letter	Amendment	Date	Initials

GJF 11·38 & 39

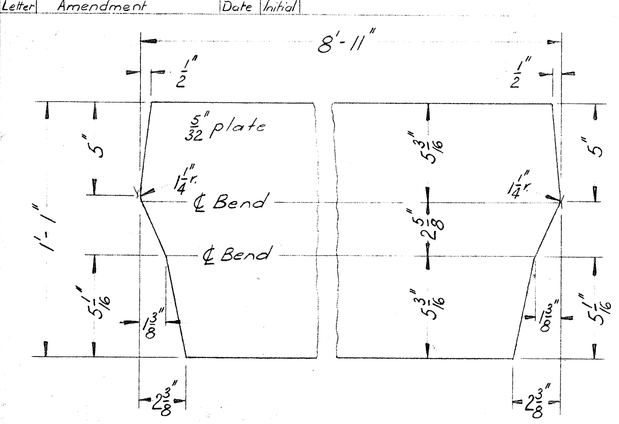

Shape Before Bending

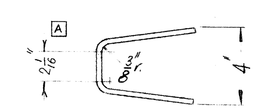

HORIZONTAL STIFFENER
End Plate
2 Thus
[B] Steel AS-A186 Grade 350

B	AS-A186 Gde 350 ex AS-A151 Gde B	19-6-72	I.F.S.
A	2 1/16" dim. added.	29-11-71	J.R.W.
Letter	Amendment	Date	Initials

GJF 11·40

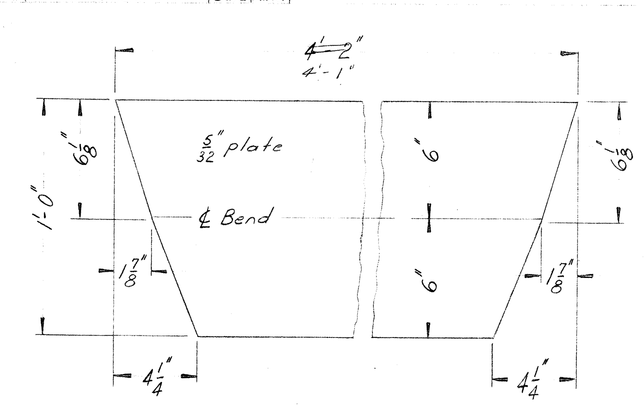

Shape Before Bending

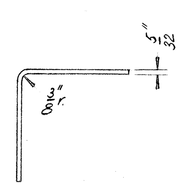

STIFFENER
Torque Box
2 Thus
[B] Steel AS-A186 Grade 350

C - 41 Dim 4'-1" & 4'-2" 9-4-79

B	AS-A186 Gde 350 ex AS-A151 Gde B	19-6-72	I.F.S.
Letter	Amendment	Date	Initial

GJF 11·41

Letter	Date	Revision
A	29-11-71	·38 - ·40.
B	19-6-72	·30 - ·41
C	9-4-79	·41

OFFICE COPY
11 DEC 1978
METAL FABRICATION 21-8-79
Spare

VICTORIAN RAILWAYS
R.S. ENG.R C. ENG.R

GJF 11·29-41

BODY DETAILS

DRAWN A.J.R. WAS TRACED
CHECKED BHL DATE 28-6-71